CRISTAL 8

CADEL

Certificate model name: CRISTAL 8 T1

www.cadelsrl.com



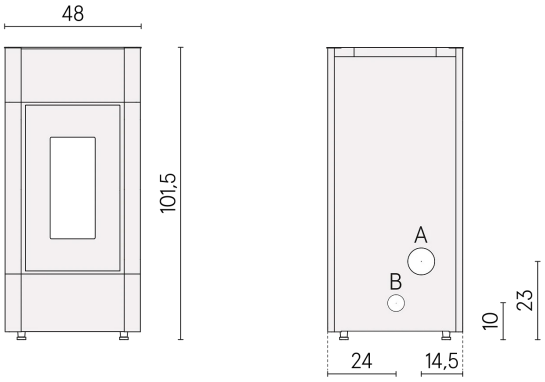

Pellet Air

TECHNICAL DATA

Thermic Power (at min-at max)	kW	2,5 - 8,5
Introduced thermal power (at max)	kW	9,5
Water useful power (at min-at max)	kW	_ - _
Seasonal energy efficiency	ηs [%]	85
Useful efficiency (at min-at max)	%	90 - 89
Heatable volume (at min-at max)	m³	70 - 238
CO_2 (min-max)	%	6,3- 12,0
Emissions CO (13% O_2) (at min-at max)	mg/Nm³	297 - 160
Emissions OGC (13%O_2) (at min-at max)	mg/Nm³	5,0- 3,0
Emissions NOX (13% O_2) (at min-at max)	mg/Nm³	120 - 99
Dust content at 13% O_2 (at min-at max)	mg/Nm³	20 - 15
Fuel Pellet	mm	Ø6 L=3÷40
Hopper capacity	kg	17
Hourly consumption (at min-at max)	kg/h	0,6 - 2,0
Autonomy (at min-at max)	h	28 - 8
Supply and frequency	V-Hz	230-50
Ignition electrical absorption	W	340
Operating electrical absorption (at max)	W	96
Draught for chimney sizing calculation (EN13384-1)	Pa	2
Mass of smoke (at min-at max)	g/sec	3,1 - 5,8
Exhaust fumes temperature (at min-at max)	°C	125 - 196
Distance from material comb. (back/side/under)	mm	200 / 300 / 15
Distance to material comb. (front/top)	mm	1000 / 750
Exhaust fumes outlet (A)	Ø mm	80
Combustion air inlet (B)	Ø mm	60
Appliance Type (tightness)	Type	CC50

PLUS

- Back exhaust
- Upper exhaust (optional)
- Concentric flue kit (optional)
- Flexibility of installation
- Shield
- Cast iron door
- Cast iron burning pot
- Connection to the external thermostat

AVAILABLE FINISHES

7026040	Steel Anthracite	EAN 8053859023111
7026038	Steel White	EAN 8053859023098
7026039	Steel Red Bordeaux	EAN 8053859023104

CERTIFICATIONS

European standards
Art. 15A B-VG 2015
BImSchV 2015
Regensburg
München
Stuttgart
Aachen

EN 16510-1:2022 / EN 16510-2-6:2022

CE

A +

STOVE PACKAGE

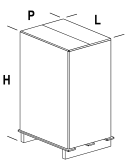

L (cm)	H (cm)	P (cm)
80	118	61

Volume (m³)	0,58
Gross weight (kg)	80
Net weight (kg)	70

STORAGE



N° (max)
2

TRANSPORT

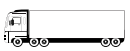

66 pz

Rev. 23102026