01 / 2022 **VERSION**

16/68-up | The stove

appearance	compact and subtle design
ergonomics	accessibility to all mechanisms
high efficiency	
economical	low wood consumption
low pollutant levels	low emission of CO and fine particles
air-tightness	++
for traditional and energy-efficient homes	option of direct outside air inlet

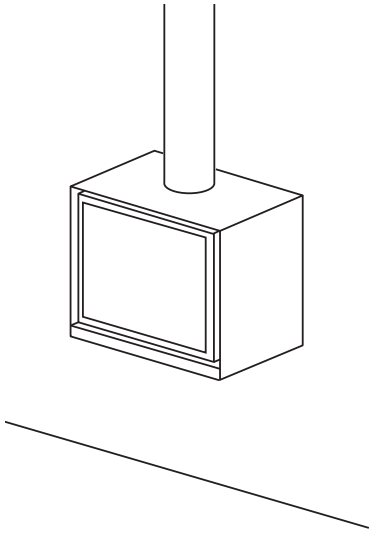

TECHNICAL SPECIFICATIONS

GENERAL

TYPE OF SYSTEM	suspended stove
MATERIALS	steel + vermiculite
COLOUR	Stûv grey
LOADING	manual
TYPE OF OPENING	hinges on the left
FUEL	wood
POSITION OF LOGS	horizontal
LENGTH OF LOGS	50 cm

WEIGHT / DIMENSIONS

WEIGHT	122 kg
Ø OF SMOKE DUCT	180 mm
HOT-AIR OUTLET	front
Ø OUTSIDE AIR INLET	63 mm

PERFORMANCE

OUTPUT	7.5 kW
USAGE RANGE	5-9 kW
EFFICIENCY	77 %
CO EMISSIONS	0.10 %
FINE PARTICLE EMISSIONS	19 mg/Nm^3
RANGE OF WOOD CONSUMPTION	1.5 - 2.6 kg/h
MINIMUM DRAW	12 Pa
SMOKE MASS FLOW	7.9 g/s
AVERAGE SMOKE TEMPERATURE	301 °C
CONSUMPTION OF AIR FOR COMBUSTION	20.8 m^3/h
ENERGY EFFICIENCY INDEX (EEI)	103
ENERGY EFFICIENCY CLASS	A

ACCESSORIES / EQUIPMENT

ACCUMULATION	✗
CUPBOARD	✗
BARBECUE	✗
ASHTRAY	✗
CONVECTION	✓
FAÇADE	✗
OPEN FIRE	✗
GROUND PLATE	✗
READY-TO-FIT	✗
ROTARY FUNCTION	✗
BASE	✗
FAN	✗
RETRACTABLE GLASS	✗
DIRECT AIR INLET	❍

AIR

DIRECT OUTSIDE INLET	❍
CONTROL OF PRIMARY AIR	✓
CONTROL OF SECONDARY AIR	✓
POST-COMBUSTION	✓
AIR-TIGHTNESS	++
OPERATION WITHOUT FAN	✓
OVERHEATING INDICATOR	✗

MINIMUM SAFETY DISTANCE FROM ADJACENT COMBUSTIBLE MATERIALS

BACK FACE	non-combustible wall
SIDE FACE	15 cm
UPPER FACE	-
INSIDE FACE	0 cm

LEGEND

✓	STANDARD
✗	UNAVAILABLE
❍	OPTIONAL

according to:
- OPair (CH)
- BE Phase 3
- BImSchV2 (DE)
- ECODESIGN 2022

CE A