Oviedo



TECHNICAL DATA

HRP. Heat-resistant Paint	Yes
Ral	No
Dual combustión	No
Double Hood	No
Detachable deflector	Yes
Ventilated back	No
Rotating system	No
Combustion	L-G-B
Wall mount bracket	No
Flue pipe to the ceiling	No
Spark arrestor	Op
Commercial pipe connection diameter	H 200
Commercial pipe must be purchased separately	-
Net weight	110 kg
Gross weight	130 kg
Packaging	1230 x 1230 x 1800 mm
Performance	73%
Power	14,4 Kw

Model: Central

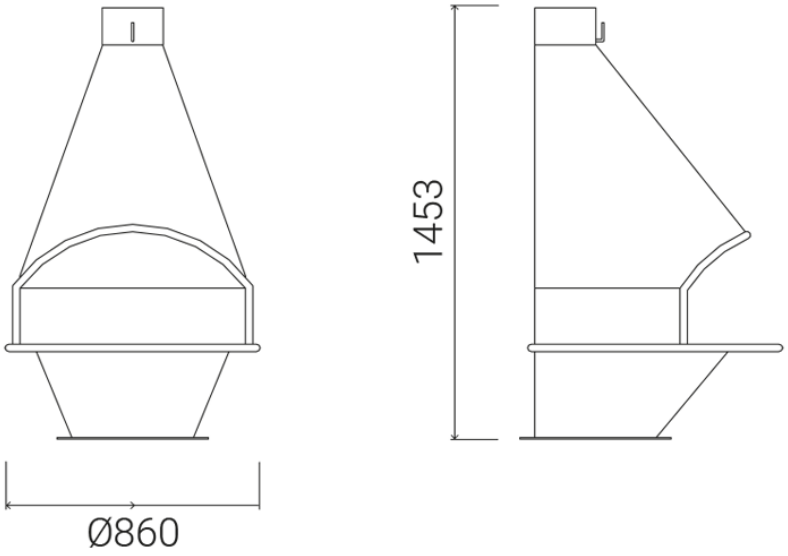

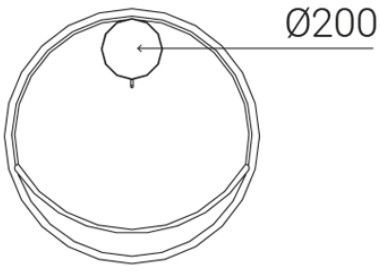

C/ de Folgueroles, 3
Pol. Ind. Malloles
08500 Vic | Barcelona

T:+34 93 459 87 01
https://www.traforart.net
traforart@traforart.net

TRAFORART